MPN-16
PERFORMANCE LINE

männer

SPECTRIX

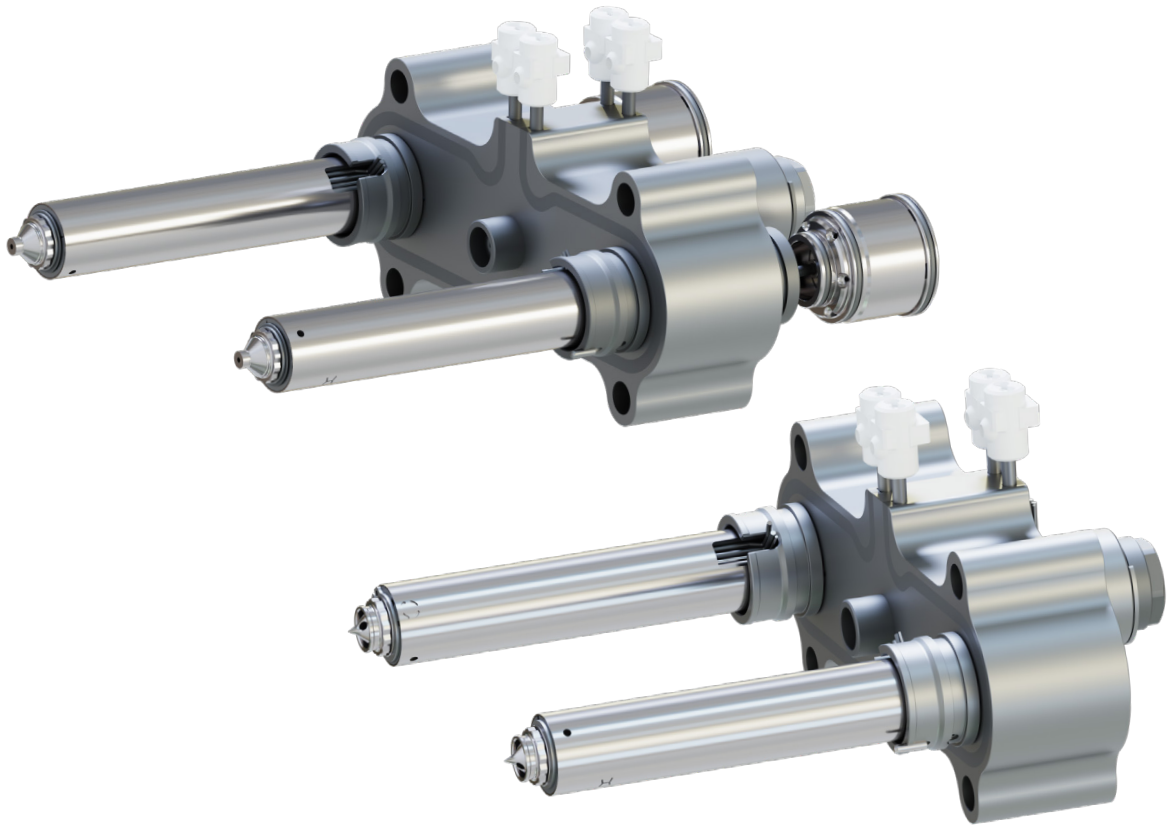

© SPECTRIX Technical specifications subject to change.

Table of Contents

Hot Runner Technology 3
General Description of the Nozzle 3
General Description of MPN-16 3
Target Group 3
Applied Standards and Norms 3
Tolerances and Customer Graphics 3
Bolt Down Manifold 4
Minimum Distance between Nozzle Centers 5
Technical Data TS16, TX16 and TXX16 6
Nozzle Tip Styles TS16, TX16 and TXX16 7
Nozzle Tip Cutout Dimensions TS16 8
Nozzle Tip Cutout Dimensions TX16 8
Nozzle Tip Cutout Dimensions TXX16 8
Technical Data VS16, VSA16, VX16 and VP6-2/3 9
Nozzle Tip Styles VS16, VSA16, VX16 and VP6-2/3 10
Nozzle Tip Cutout Dimensions VS16 and VSA16 11
Nozzle Tip Cutout Dimensions VX16 11
Nozzle Tip Cutout Dimensions VP6-2/3 11
Heater with integrated Thermocouple 12
Maintenance Kit 13
Resin - Tip suitability 14
Tip performance & Suitability overview 15
Maximum shot weight 16
Product range comparison - Nozzle diameter 17
Product range comparison - Min. distance between Nozzles 18
Contact 19
Copyright 19
Patents 19

© SPECTRIX Technical specifications subject to change.

Hot Runner Technology

This catalog gives an overview of the latest product, including descriptions, dimensions and technical data. The text next to the graphics gives additional instructions on the use of the product.
If available, options are explained with pictures and text.
All available accessories for this product are specified. Where necessary, a separate chapter gives the information and important technical data.

General Description of the Nozzle

Hot runner nozzles are the connection to the cavity. They either gate directly into the part or into a sub runner which will feed into the cavity.

General Description of MPN-16

MPN-16 series nozzles have an enlarged flow bore to optimize injection and reduce pressure lose.
The nozzles have a patented heating system and are made of special steel. Different lengths are available. The nozzles are suitable for the most commonly used polymers.
MPN-16 nozzles series are the ideal combination with Bolt Down Manifolds.

Target Group

The target groups of this product catalog are mold designers, toolmakers, molders and service technicians. They will find the needed information in the relevant chapters.

Applied Standards and Norms

- DIN EN IEC/IEEE 82079-1 Edition 2 Creation of usage information for products
- Standard and norms for Technical drawings

Tolerances and Customer Graphics

The product catalog gives a general information about the product. For tolerances and other details, use the customer drawings. There you find the detailed information.

© SPECTRIX Technical specifications subject to change.

Illustrations simplified, schematically drawn and not to scale. All dimensions in mm.

Bolt Down Manifold

The following picture shows the standard design, components and dimensions.
Pin adjustment +/-0.75 with step +/-0.05.
On the left side you can find the valve gate manifold. On the right side you see the open gate one.

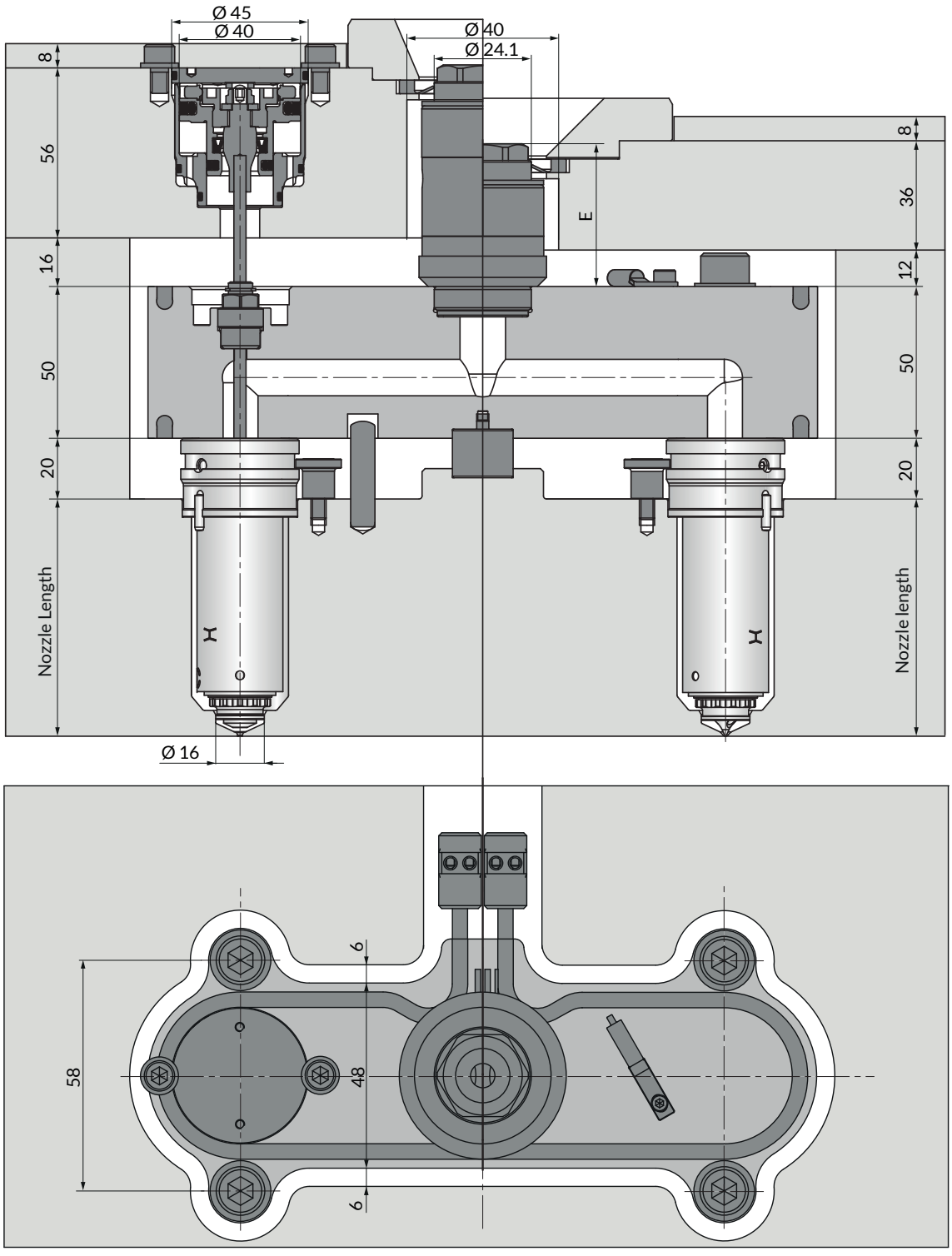

E (length)
E = 45, 65, 85

© SPECTRIX Technical specifications subject to change.

Illustrations simplified, schematically drawn and not to scale. All dimensions in mm.

Minimum Distance between Nozzle Centers

In this graphic the minimum distance between the nozzle centers is drawed, as example.
Other minimum distance between nozzles centers are available on request.

Valve Gate

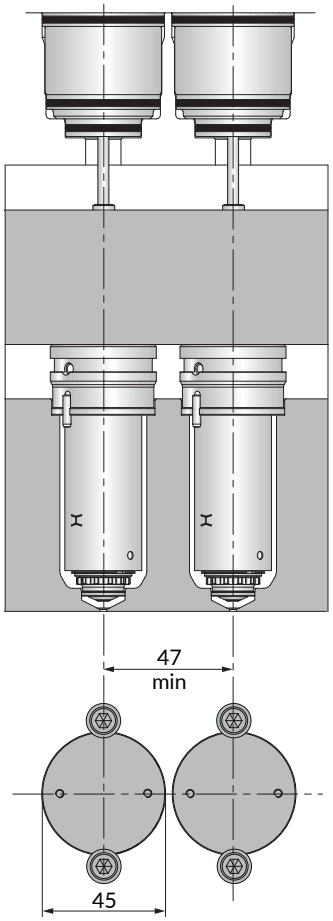

Open Gate

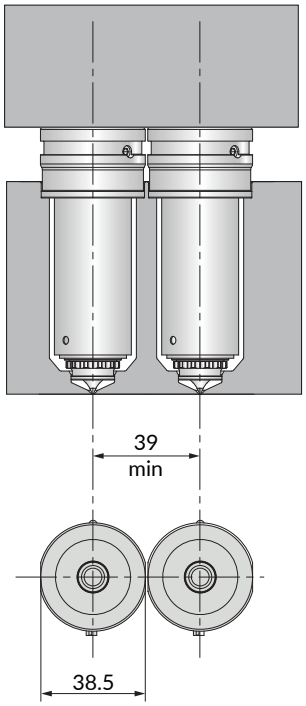

© SPECTRIX Technical specifications subject to change.

Illustrations simplified, schematically drawn and not to scale. All dimensions in mm.

Technical Data TS16, TX16 and TXX16

There are slight differences in the length range of different tip types.
E18764 Bi-hex Ø18 Tightening torque 40 Nm.

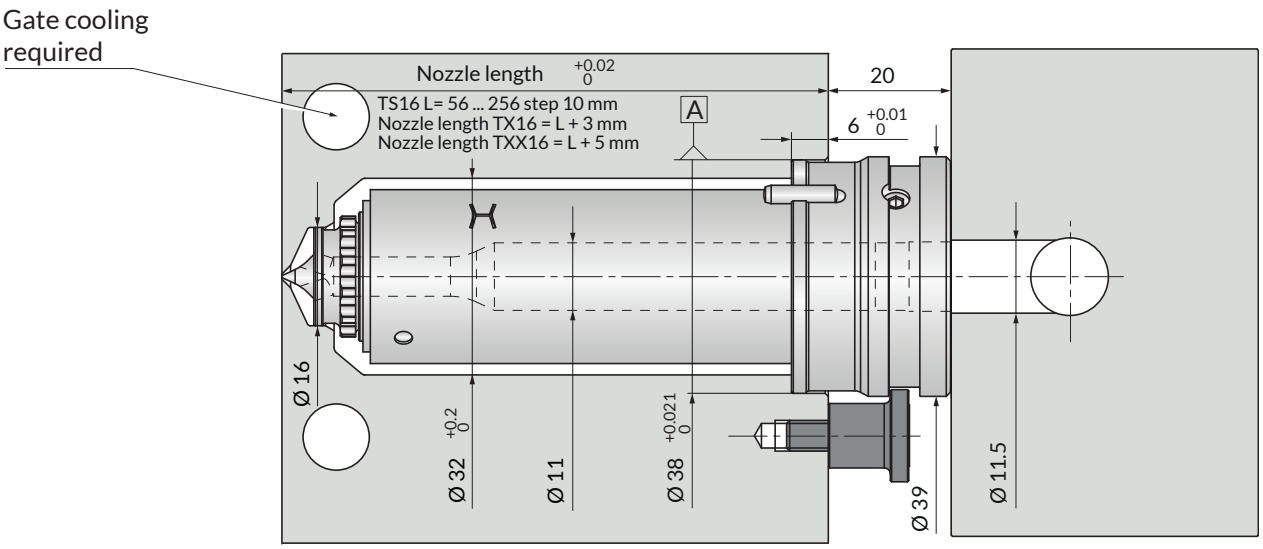

TS16 Nozzle length [mm] **(L)**	TX16 Nozzle length [mm] **(L+3)**	TXX16 Nozzle length [mm] **(L+5)**	Nozzle Code	Watt [W]
56*	59*	61*	MPN-16-38-...-056	270
66	**69**	**71**	**MPN-16-38-...-066**	**270**
76	**79**	**81**	**MPN-16-38-...-076**	**320**
86	**89**	**91**	**MPN-16-38-...-086**	**320**
96	**99**	**101**	**MPN-16-38-...-096**	**320**
106	**109**	**111**	**MPN-16-38-...-106**	**370**
116	**119**	**121**	**MPN-16-38-...-116**	**370**
126*	129*	131*	MPN-16-38-...-126	370
136	**139**	**141**	**MPN-16-38-...-136**	**420**
146*	149*	151*	MPN-16-38-...-146	420
156*	159*	161*	MPN-16-38-...-156	420
166	**169**	**171**	**MPN-16-38-...-166**	**460**
176*	179*	181*	MPN-16-38-...-176	460
186*	189*	191*	MPN-16-38-...-186	460
196*	199*	201*	MPN-16-38-...-196	490
206	**209**	**211**	**MPN-16-38-...-206**	**490**
216*	219*	221*	MPN-16-38-...-216	490
226*	229*	231*	MPN-16-38-...-226	520
236*	239*	241*	MPN-16-38-...-236	520
246*	249*	251*	MPN-16-38-...-246	520
256	**259**	**261**	**MPN-16-38-...-256**	**520**

Bold items: Preferred standard lengths

* Extended standard

Example nozzle code: MPN-16-38 - TX16 - 206
Tip style
Length L

© SPECTRIX Technical specifications subject to change.

Illustrations simplified, schematically drawn and not to scale. All dimensions in mm.

Nozzle Tip Styles TS16, TX16 and TXX16

The following nozzle tip styles are available.

Thermal gate - Torpedo - Blind			
Tip Style with Description	Tip Group Code	Picture	Gate diameter
TS16 Standard	MS03173	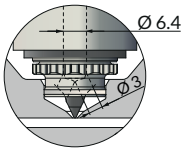	Ø 0.8 min - Ø 2 max

Thermal gate - Torpedo - Blind - Extended tip			
Tip Style with Description	Tip Group Code	Picture	Gate diameter
TX16 Extended 3 mm	MS03177	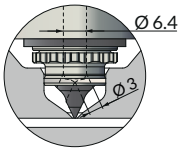	Ø 0.8 min - Ø 2 max

Thermal gate - Torpedo - Blind - Extended tip			
Tip Style with Description	Tip Group Code	Picture	Gate diameter
TXX16 Extended 5 mm	MS03179	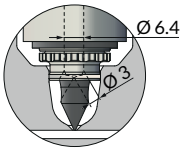	Ø 0.8 min - Ø 2 max

© SPECTRIX Technical specifications subject to change.

Illustrations simplified, schematically drawn and not to scale. All dimensions in mm.
Dimensions for reference only. Reference system drawing for complete dimensions prior to machining gate detail in mold.
The following pictures shows the nozzle tip cutout dimensions for this nozzle.

Nozzle Tip Cutout Dimensions TS16

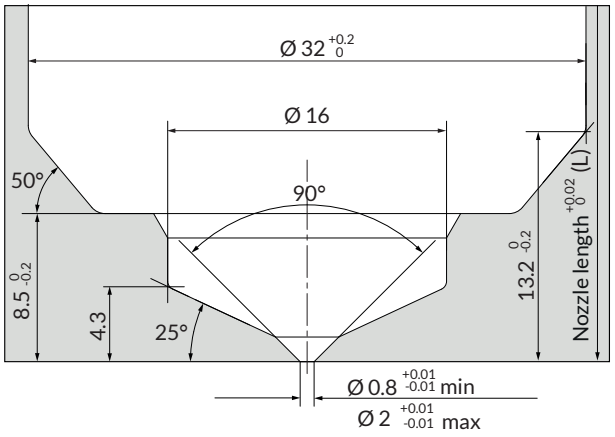

Nozzle length (L) =
56 ... 256 step 10 mm

Nozzle Tip Cutout Dimensions TX16

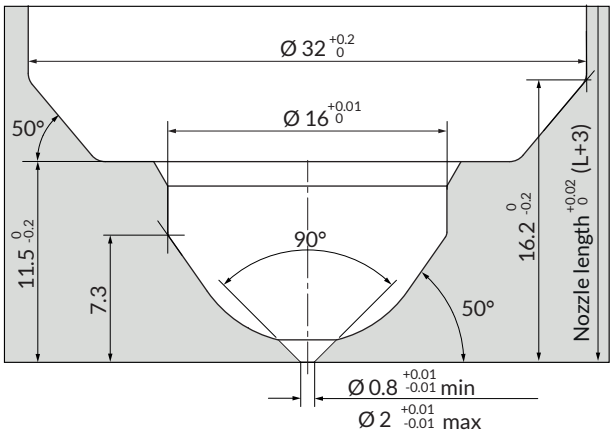

Nozzle length (L +3) =
59 ... 259 step 10 mm

Nozzle Tip Cutout Dimensions TXX16

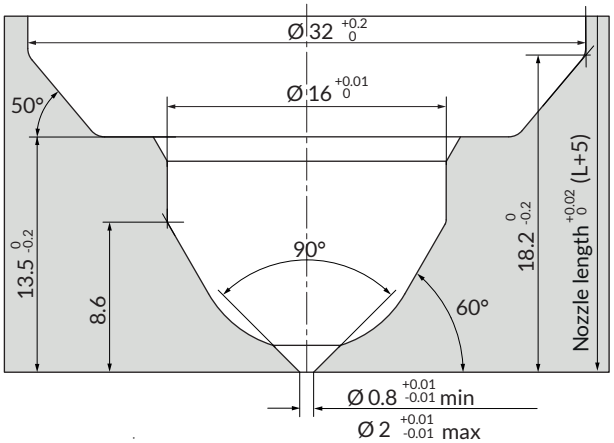

Nozzle length (L +5) =
61 ... 261 step 10 mm

© SPECTRIX Technical specifications subject to change.

Illustrations simplified, schematically drawn and not to scale. All dimensions in mm.

Technical Data VS16, VSA16, VX16 and VP6-2/3

There are slight differences in the length range of different tip types.
E18764 Bi-hex Ø18 Tightening torque 40 Nm.

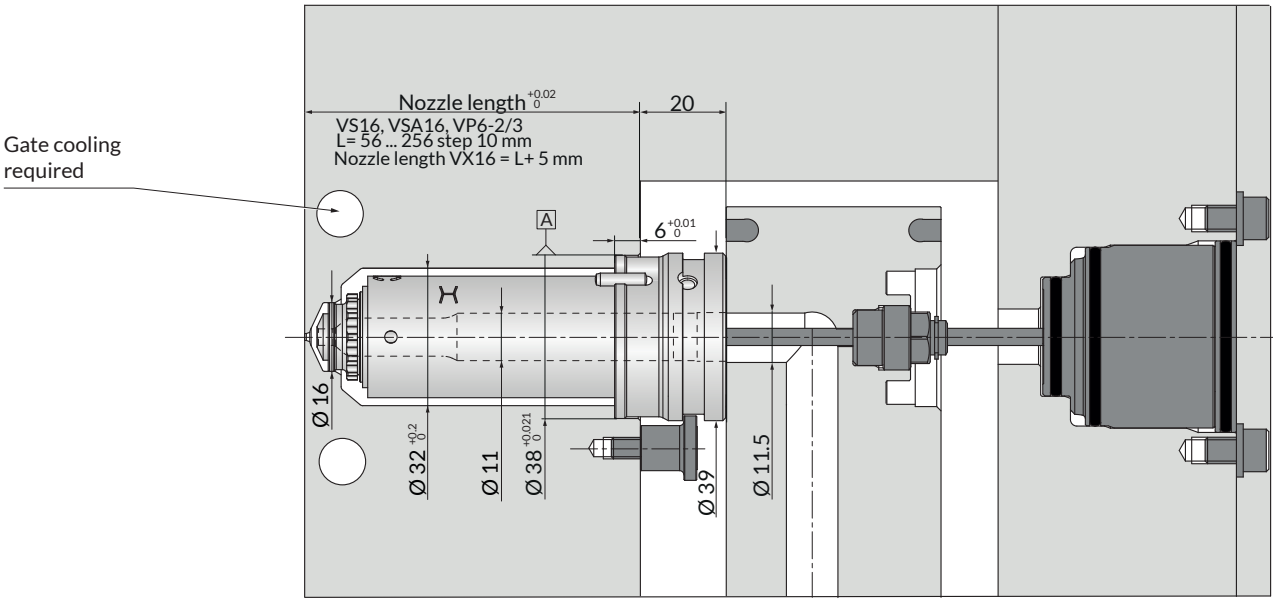

VS16-VSA16-VP6-2/3 Nozzle length [mm] (L)	VX16 Nozzle length [mm] (L+5)	Nozzle code	Watt [W]
56*	61*	MPN-16-38-...-056	270
66	**71**	**MPN-16-38-...-066**	**270**
76	**81**	**MPN-16-38-...-076**	**320**
86	**91**	**MPN-16-38-...-086**	**320**
96	**101**	**MPN-16-38-...-096**	**320**
106	**111**	**MPN-16-38-...-106**	**370**
116	**121**	**MPN-16-38-...-116**	**370**
126*	131*	MPN-16-38-...-126	370
136	**141**	**MPN-16-38-...-136**	**420**
146*	151*	MPN-16-38-...-146	420
156*	161*	MPN-16-38-...-156	420
166	**171**	**MPN-16-38-...-166**	**460**
176*	181*	MPN-16-38-...-176	460
186*	191*	MPN-16-38-...-186	460
196*	201*	MPN-16-38-...-196	490
206	**211**	**MPN-16-38-...-206**	**490**
216*	221*	MPN-16-38-...-216	490
226*	231*	MPN-16-38-...-226	520
236*	241*	MPN-16-38-...-236	520
246*	251*	MPN-16-38-...-246	520
256	**261**	**MPN-16-38-...-256**	**520**

Example nozzle code: MPN-16-38 - VS16 - 206
Tip style
Nozzle length L

Bold items: Preferred standard lengths

* Extended standard

© SPECTRIX Technical specifications subject to change.

Illustrations simplified, schematically drawn and not to scale. All dimensions in mm.

Nozzle Tip Styles VS16, VSA16, VX16 and VP6-2/3

The following nozzle tip styles are available.

Valve gate - Straight pin - Blind			
Tip Style with Description	Tip Group Code	Picture	Gate diameter
VS16 Standard	MS03185	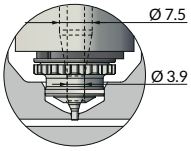	Ø 1.6 min - Ø 3.7 max

Valve gate - Straight pin - Blind			
Tip Style with Description	Tip Group Code	Picture	Gate diameter
VSA16 Standard - Advanced	MS03201	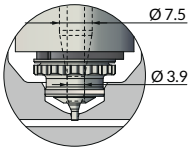	Ø 1.6 min - Ø 3.7 max

Valve gate - Straight pin - Blind - Extended tip			
Tip Style with Description	Tip Group Code	Picture	Gate diameter
VX16 Standard - Extended 5 mm	MS03187	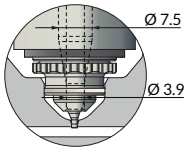	Ø 1.6 min - Ø 3.7 max

Valve gate - Straight pin - Plunged Through			
Tip Style with Description	Tip Group Code	Picture	Gate diameter
VP6-2 Plunged Through	MS03191	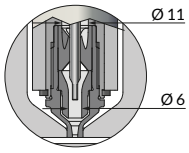	Ø 2

Valve gate - Straight pin - Plunged Through			
Tip Style with Description	Tip Group Code	Picture	Gate diameter
VP6-3 Plunged Through	MS03193	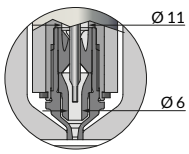	Ø 3

© SPECTRIX Technical specifications subject to change.

Illustrations simplified, schematically drawn and not to scale. All dimensions in mm.
Dimensions for reference only. Reference system drawing for complete dimensions prior to machining gate detail in mold.
The following pictures shows the nozzle tip cutout dimensions for this nozzle.

Nozzle Tip Cutout Dimensions VS16 and VSA16

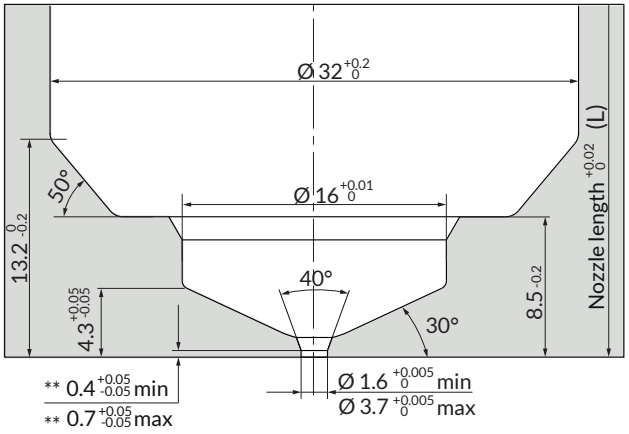

Nozzle length (L) =
56 ... 256 step 10 mm

Nozzle Tip Cutout Dimensions VX16

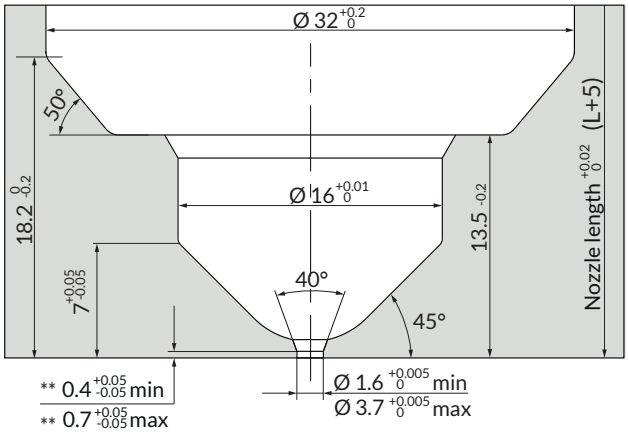

Nozzle length (L +5) =
61 ... 261 step 10 mm

** To be defined according to polymers characteristics, injection cycle and cooling cycles.

Nozzle Tip Cutout Dimensions VP6-2/3

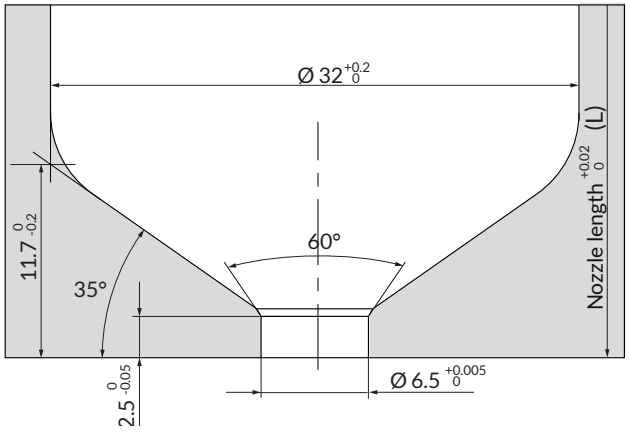

Nozzle length (L) =
56... 256 step 10 mm

© SPECTRIX Technical specifications subject to change.

Illustrations simplified, schematically drawn and not to scale.

Heater with integrated Thermocouple

This chapter gives a schematic overview of the Heater including Technical Data.

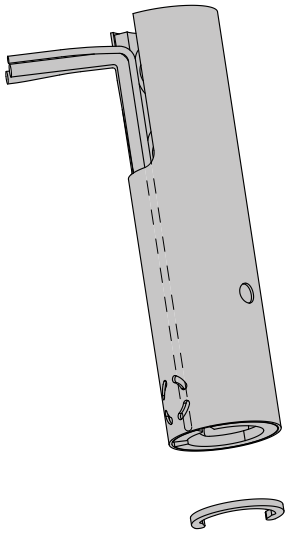

Example heater code: MPH16 - 206
Nozzle diameter
Length L

Description	Code
Heater fixing ring	E19074

Heater group cables		
Heater	Orange / Grey	230 V
Thermocouple	Black	TC+
	White	TC-

© SPECTRIX Technical specifications subject to change.

TS16, VS16, VSA16, VP6 Nozzle length [mm] **(L)**	TX16 Nozzle length [mm] **(L+3)**	TXX16, VX16 Nozzle length [mm] **(L+5)**	Heater group code	Watt [W]
56*	59*	61*	MPH16-056-...	270
66	**69**	**71**	**MPH16-066-...**	**270**
76	**79**	**81**	**MPH16-076-...**	**320**
86	**89**	**91**	**MPH16-086-...**	**320**
96	**99**	**101**	**MPH16-096-...**	**320**
106	**109**	**111**	**MPH16-106-...**	**370**
116	**119**	**121**	**MPH16-116-...**	**370**
126*	129*	131*	MPH16-126-...	370
136	**139**	**141**	**MPH16-136-...**	**420**
146*	149*	151*	MPH16-146-...	420
156*	159*	161*	MPH16-156-...	420
166	**169**	**171**	**MPH16-166-...**	**460**
176*	179*	181*	MPH16-176-...	460
186*	189*	191*	MPH16-186-...	460
196*	199*	201*	MPH16-196-...	490
206	**209**	**211**	**MPH16-206-...**	**490**
216*	219*	221*	MPH16-216-...	490
226*	229*	231*	MPH16-226-...	520
236*	239*	241*	MPH16-236-...	520
246*	249*	251*	MPH16-246-...	520
256	**259**	**261**	**MPH16-256-...**	**520**

Bold items: Preferred standard lengths

* Extended standard

Maintenance Kit

Code	Description
E22392	Maintenance kit for MPN-16 nozzles

Composed by:
1. Bi-hexagon socket
2. Heater extractor
3. Insertion tool for heater

© SPECTRIX Technical specifications subject to change.

Resin - Tip suitability

Nozzle Series	Thermal Gate			Valve Gate			
	TS	TX	TXX	VS	VX	VSA	VP
MPN-07 / MPN-08 MPN-10 / MPN-16 Sliding							
Polyolefine							
PE, HDPE, LDPE, LLDPE	✓	✓	✓	✓	✓	✓	✓
PP, PP/PE, PP+Talc	✓	✓	✓	✓	✓	✓	✓
Polyolefin ≤GF35	✓	✓		⊗	⊗		
TPE							
TPE-O/S/V, PP/EPDM	⊗	⊗		✓	✓	✓	✓
TPE-U	⊗			✓	✓	✓	✓
Semi-Crystalline							
PBT	✓	✓		✓	✓	✓	✓
PBT≤35GF	✓	✓		⊗	⊗	✓	✓
PA6	✓	✓	⊗	✓	✓	✓	✓
PA6 ≤35GF	✓	✓	⊗	⊗	⊗	✓	✓
PA6.6	✓	✓		✓	✓	✓	✓
PA6.6≤35GF	✓	✓		⊗	⊗	✓	✓
PA4.6	⊗	⊗				⊗	⊗
PPA	✓	✓		✓	✓	✓	✓
PPA≤35GF	✓	✓		⊗	⊗	✓	✓
POM	✓	✓		✓	✓	✓	✓
PET				✓	✓	✓	✓
PET≤35GF	✓	✓		⊗	⊗	✓	✓
Amorphous							
PMMA	✓	✓		✓	✓	✓	✓
ABS	✓	✓	✓	✓	✓	✓	✓
ASA	✓	✓	✓	✓	✓	✓	✓
SAN	✓	✓	⊗	✓	✓	✓	✓
SMA	✓	✓		✓	✓	✓	✓
PS (HIPS, PS clear)	✓	✓	✓	✓	✓	✓	✓
PC	✓	✓		✓	✓	✓	✓
PC ≤35GF	✓	✓		✓	✓	✓	✓
PPE/PS	✓	✓		✓	✓	✓	✓
PPE/PA (Noryl GTX)	✓	✓		✓	✓	✓	✓
Blends							
PC/ABS	✓	✓	⊗	✓	✓	✓	✓
PC/ABS ≤GF35	✓	✓		✓	✓	✓	✓
PC/ASA	✓	✓	⊗	✓	✓	✓	✓
PC/ASA ≤GF35	✓	✓		✓	✓	✓	✓
PC/PBT	✓	✓	⊗	✓	✓	✓	✓
PC/PBT ≤GF35	✓	✓		✓	✓	✓	✓
PC/PET	✓	✓		✓	✓	✓	✓
PC/PET ≤GF35	✓	✓		✓	✓	✓	✓
PA/ABS	✓	✓		✓	✓	✓	✓
PA/ABS ≤GF35	✓	✓		✓	✓	✓	✓
High Temperature							
PEEK	⊗			⊗	⊗	⊗	⊗
PPS	⊗			⊗	⊗	⊗	⊗
PES	⊗			⊗	⊗	⊗	⊗
PSU	⊗			⊗	⊗	⊗	⊗
PEI	⊗			⊗	⊗	⊗	⊗
Special							
PET Clear	⊗			⊗	⊗	⊗	⊗
PETG	⊗			✓	✓	✓	✓
PCTG	⊗			✓	✓	✓	✓
COC, COP	⊗			✓	✓	✓	✓
LCP	⊗			✓	✓	✓	✓

⊗ Requires review

© SPECTRIX Technical specifications subject to change.

Tip performance & Suitability overview

THERMAL GATE

TS

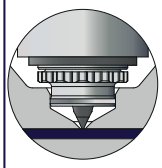

Resin group	Suitability
Polyolefine	
Amorphous	
Semi-Crystalline	
Blends	
Specials	

Feature	Performance
Processing window	
Wear resistance	
Color change	
Cosmetic gating	

TX

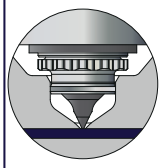

Resin group	Suitability
Polyolefine	
Amorphous	
Semi-Crystalline	
Blends	
Specials	

Feature	Performance
Processing window	
Wear resistance	
Color change	
Cosmetic gating	

TXX

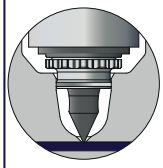

Resin group	Suitability
Polyolefine	
Amorphous	
Semi-Crystalline	
Blends	
Specials	

Feature	Performance
Processing window	
Wear resistance	
Color change	
Cosmetic gating	

VALVE GATE

VS

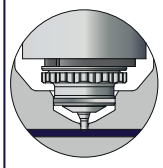

Resin group	Suitability
Polyolefine	
Amorphous	
Semi-Crystalline	
Blends	
Specials	

Feature	Performance
Processing window	
Wear resistance	
Color change	
Cosmetic gating	

VX

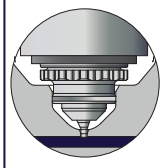

Resin group	Suitability
Polyolefine	
Amorphous	
Semi-Crystalline	
Blends	
Specials	

Feature	Performance
Processing window	
Wear resistance	
Color change	
Cosmetic gating	

VSA

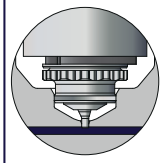

Resin group	Suitability
Polyolefine	
Amorphous	
Semi-Crystalline	
Blends	
Specials	

Feature	Performance
Processing window	
Wear resistance	
Color change	
Cosmetic gating	

VP

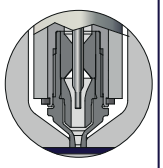

Resin group	Suitability
Polyolefine	
Amorphous	
Semi-Crystalline	
Blends	
Specials	

Feature	Performance
Processing window	
Wear resistance	
Color change	
Cosmetic gating	

Tipycal resins	
Polyolefine	PE, HDPE, LDPE, LLDPE, PP/EPDM, (TPE *)
Amorphous	PMMA, ABS, SAN, SMA, PS, PC, PPE, PPE/PA
Semi-Crystalline	PBT, PA6, PA6.6, PA4.6, PPA, POM,(TPU *)
Blends	PC/ABS, PC/ASA, PC/PBT, PA/ABS
Specials	PEEK, PPS, PES, PSU, PEI, PET, PETG, PCTG, COC, COP, LCP

* Check for application

© SPECTRIX Technical specifications subject to change.

Maximum shot weight

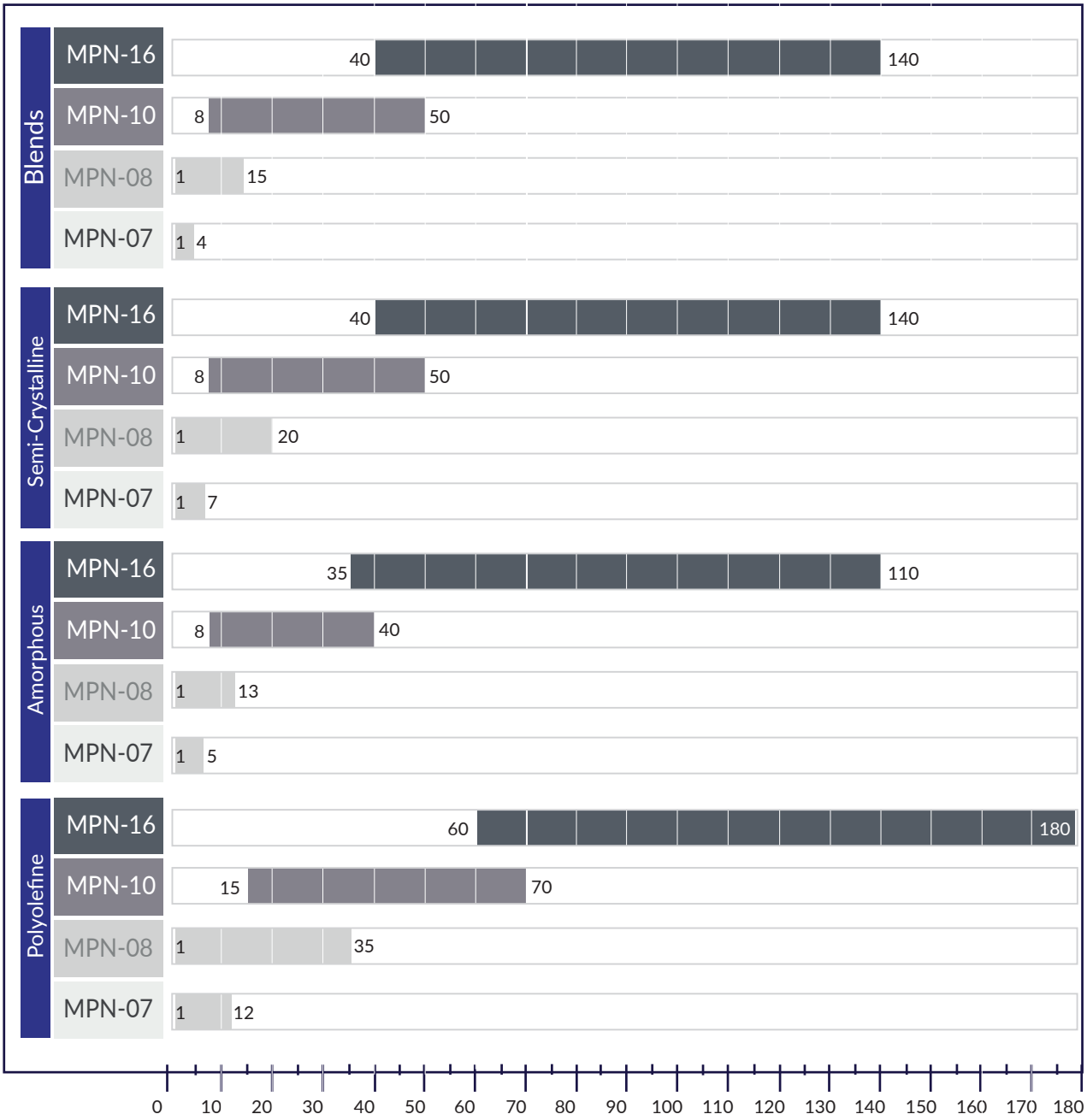

The chart shows indicative values of the max shot weight by nozzle series.
For more accurate shot weights, the exact material grade and a complete application data set are needed.

Tipycal resins	
	Polyolefine: PE, HDPE, LDPE, LLDPE, PP/EPDM, (TPE *)
	Amorphous: PMMA, ABS, SAN, SMA, PS, PC, PPE, PPE/PA
	Semi-Crystalline: PBT, PA6, PA6.6, PA4.6, PPA, POM,(TPU *)
	Blends: PC/ABS, PC/ASA, PC/PBT, PA/ABS
	Specials: PEEK, PPS, PES, PSU, PEI, PET, PETG, PCTG, COC, COP, LCP

* Check for application

© SPECTRIX Technical specifications subject to change.

Product range comparison - Nozzle diameter

MPN-07
MPN-08
MPN-10
MPN-16

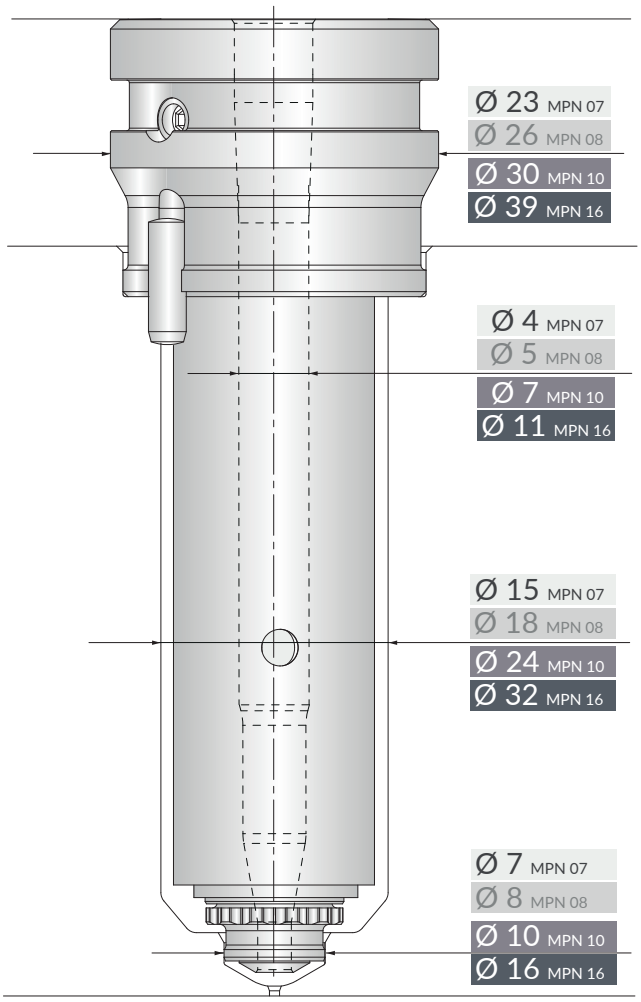

© SPECTRIX Technical specifications subject to change.

Product range comparison - Min. distance between Nozzles

Minimum distance between the nozzle centers.

MPN-07
MPN-08
MPN-10
MPN-16

Valve Gate

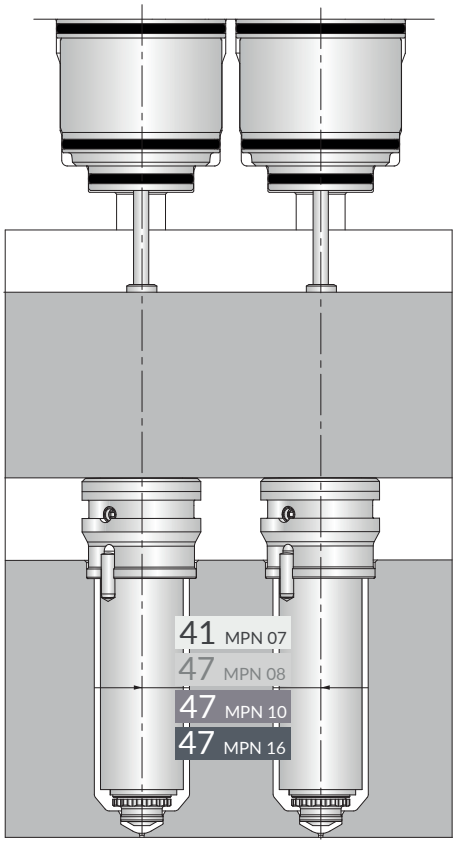

Open Gate

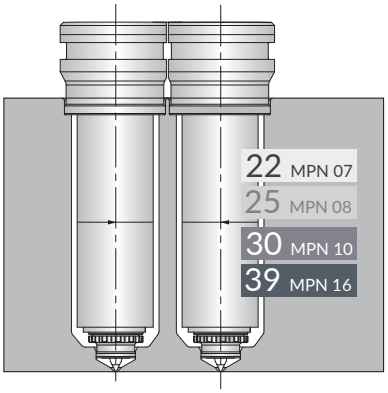

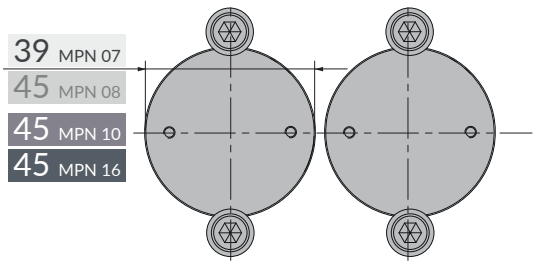

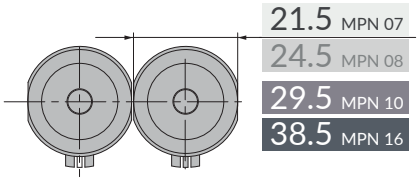

© SPECTRIX Technical specifications subject to change.

Contact

Here you will find the main contact from Männer.

Europe / Germany

Otto Männer GmbH
Unter Gereuth 9–11
79353 Bahlingen a.K.

Tel. :+49 (0) 7663 609-0
Fax :+49 (0) 7663 609-299

Internet: www.maenner-group.com
Email: info@maenner-group.com

Copyright

All text and pictures contained herein are the property of Männer.

Copyright © 2026 Männer.

Patents

Note the copyright protection reminder pursuant to DIN ISO 16016. The specified patents are the property of Otto Männer GmbH. Their distribution and dissemination is permitted only subject to approval.
The products are protected by US, CA, CN, JP and European Community patents published on WEB.
Property of Otto Männer GmbH. Not for third parties without written permission.

SPECTRIX brings together the industry-leading brands **Männer, Foboha, Synventive, Thermoplay, Gammaflux, and Priamus**. Combining more than 50 years of expertise with 2,000 specialists worldwide, SPECTRIX delivers the full spectrum of end-to-end injection molding solutions.

From part design and material science to molds, hot runners, sensing and control technologies, qualification, specialty molding, and lifecycle services, SPECTRIX supports every stage of the injection molding process. Customers can choose individual technologies and services or benefit from a fully integrated end-to-end solution tailored to their specific needs. With a global footprint and strong local expertise, SPECTRIX partners with customers from concept through production and beyond.

SPECTRIX – Enduring Advantage, Engineered.

SPECTRIX

männer | FOBOHA | Synventive

PRIAMUS | THERMOPLAY | Gammaflux

SPECTRIX